LABVIEW WITH DWT FOR DENOISING THE BLURRED BIOMETRIC IMAGES

FADHIL A. ALI

Oklahoma State University /Department of Electrical and Computer Engineering - USA

ABSTRACT

In this paper, biometric blurred image (fingerprint) denoising are presented and investigated by using LabVIEW applications , It is blurred and corrupted with Gaussian noise. This work is proposed algorithm that has used a discrete wavelet transform (DWT) to divide the image into two parts, this will be increasing the manipulation speed of biometric images that are of the big sizes. This work has included two tasks ; the first designs the LabVIEW system to calculate and present the approximation coefficients, by which the image's blur factor reduced to minimum value according to the proposed algorithm. The second task removes the image's noise by calculated the regression coefficients according to Bayesian-Shrinkage estimation method.

KEYWORDS

Biometric images, Gaussian noise , LabVIEW , Discrete wavelet transform (DWT)

1. INTRODUCTION

The digital image processing is dealing with numerous operations like; image(compression, edge enhancement, blurred restoration, and noise removal). One of the methods are used to improve the appearance is an image restoration , thus a restoration process uses a mathematical model for image degradation. However, the degradation model can be estimated, this model of degradation has processed and then apply the inverse process to restore the original image[1].

It should be noted that signals may not exist without noise, while data can obtained from the real world. Under ideal constrains this noise may be decreased to negligible levels, while in many practical cases the signal to noise ratio should be increased to some significant levels for all practical purposes denoising is a necessity[2]. The presence of noise in the image has two disadvantages; the first one is being the degradation of the image quality, and the second much important, that obscures important information required for accurate diagnosis[3].

The degradation model has consisted of two parts; (1) the degradation function ,and (2) the noise function. This model in the spatial domain as follows[1]:

$$D(x,y) = I(x,y) * H(x,y) + N(x,y) \quad \ldots\ldots\ldots\ldots(1)$$

where ; the $D(x,y)$ is degraded image, * denotes the convolution process. $H(x,y)$ is degradation function(distortion operator) , which is the Point-Spread Function (PSF). This function, when convolved with the image, created the distortion. $I(x,y)$ is an original image and $N(x,y)$ is the noise, therefore the purpose of the denoising techniques are the separation of the convolution

product. In the image denoising process, the information of the type for any noise presented in the original image plays a significant role. However, most of typical images are corrupted with noise modeled with a Gaussian distribution [1,4].

1.1 Gaussian Noise

The noise is equally distribution over the signal, and it has meaning that each pixel in the noisy image is the sum of the true pixel values, with a random distribution noise values. This type of noise has called Gaussian distribution noise , which has a bell shaped probability distribution function given by Equation (2) :

$$P_{Gaussian}(g) = \frac{1}{\sqrt{2\pi\sigma_n^2}} e^{-((g-M)^2/2\sigma_n^2)} \quad \text{.....(2)}$$

where; g represents the gray level, M is the mean or average of the function, and σ is the standard deviation of the noise (σ_n^2 = variance).

2. WAVELET BASED DENIOSING

Wavelets transformation have been utilized for denoising of many big size images for the recent years. The wavelet transformation is representation of images in two dependant domains, by which a localization of the wavelet basis functions in both time and frequency domain leads to multi resolution analysis and filter designs of specific application. Most of properties of the wavelet transformation makes it very effective for denoising, and it has gaining popularity in the area of biometric image denoising due to its sparsity and multi-resolution properties[5].The following figure(1) shows a three-level discrete wavelet decomposition represented in LabVIEW application as VI (virtual instrument) file, where set the levels input to 3 and its input length is 16 points.

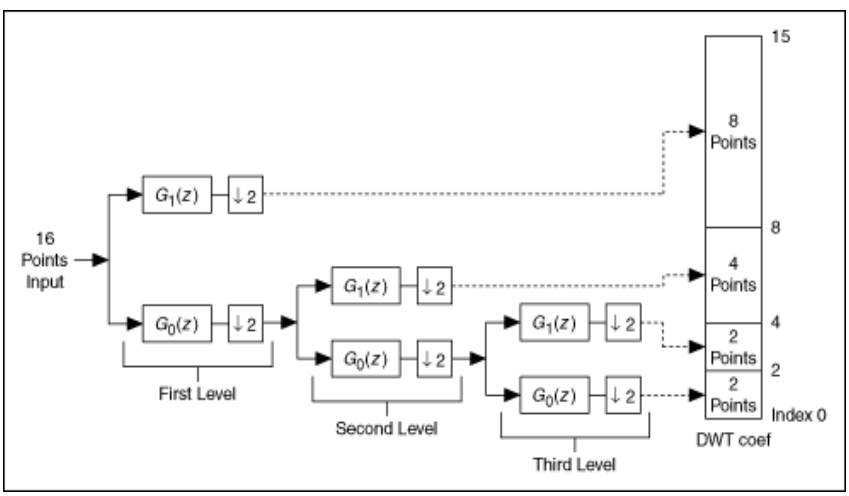

Figure 1. Discrete Wavelet transformation scheme as VI in LabVIEW

Where ; $G_1(z)$ denotes that the signal passes through a high pass filter. $G_0(z)$ denotes that the signal passes through a low pass filter.$G_1(z)$ and $G_0(z)$ form the analysis filter bank denotes a decimation on the signal with a factor of 2.

The general wavelet denoising procedure is as follows:

1. Apply wavelet transform to the noisy bio-image to produce the noisy wavelet coefficients. According to figure(1), the **DWT** coefficients output contains the approximation coefficients of the largest level and the details coefficients of each level.
2. Select appropriate threshold limit at each level and specify the type of threshold method (hard or soft thresholding) for best removal of noise.
3. Inverse wavelet transform of the threshold wavelet coefficients to obtain a denoised image.

2.1 2D Discrete Wavelet Transform

The extension of the 1D discrete wavelet decomposition and reconstruction to 2D signal processing has been easily used. At each level, VI in figure(2) implements the 1D DWT on each row signal. Also, it implements the inverse transform with the reverse operation. The following figure (2) shows the filter bank implementation for a 2D DWT.

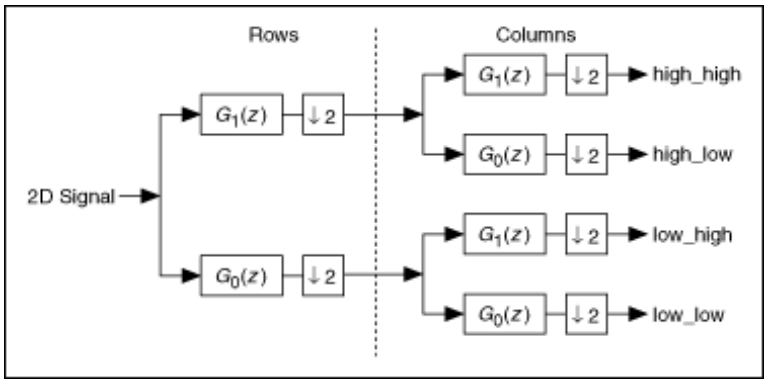

Figure 2. The Block diagram

Therefore, low_low is the approximation of the input 2D signal at a larger scale , and low_high, high_low, high_high corresponds to the information along with column, row, and diagonal directions.

2.2 Wavelet thresholding procedure

The decomposition of a data or an image into some wavelet coefficients is called wavelet thresholding. However, the comparison of detailed coefficients with a given threshold value, then shrinking these coefficients to be close to zero for taken away the effect of noise in the image.

During the thresholding process , a wavelet coefficient is compared with a given value and is set to zero if its value is less than threshold. Otherwise, it is modified that is depending on a threshold rule. The choice of a threshold is an important and, it plays a major role in the reduction or removal of noise in images. Because the denoising is frequently smoothed and reduced the sharpness of the image. It is necessary to know about two general categories of thresholding. They are hard-thresholding and soft- thresholding [6].

2.2.1 Hard Thresholding

Hard-thresholding (T_H) may defined as:

$$T_H = \begin{cases} r & \text{if } |r|>t \\ 0 & \text{if } |r|\le t \end{cases} \quad .....(3)$$

A hard threshold has indicated all coefficients whose values are greater than the selected threshold value and remain as they are, the others with magnitudes smaller than or equal are set to zero.

2.2.2 Soft Thresholding

Soft-thresholding (T_S) may defined as:

$$T_S = \begin{cases} \sin(r)\,(|r| - t) & \text{if } |r|>t \\ 0 & \text{if } |r|\le t \end{cases} \quad .....(4)$$

Soft thresholding indicated that all coefficients whose value is greater than the selected one, the sine function returns to (+1) value. When the image coefficient exceeds the preset threshold returns to (0) when it Equal the preset threshold and returns to (-1) when it falls below the threshold. And the others with values smaller than or Equal threshold value are set to zero. Practically, it is well known that a soft procedure is much better and yields visually pleasant images. That is because the hard method is discontinuous and yields abrupt artifacts in the recovered images.

2.5 Bayesian - Shrink Wavelet Thresholding

This method is used to minimize the Bayesian risk, by which Bayesian - Shrink is the threshold for each sub band will be determined. It uses soft thresholding and is sub band-dependent, means that thresholding is resulted at each band of resolution in the wavelet decomposition. It is smooth less adaptive, and it's defined as t_{BS} , as the following [7,8]:

$$t_{BS} = \sigma_n^2 / \sigma_f^2 \quad .....(5)$$

where: σ_n^2 *:* is the noise variance , and σ_f^2 : is the image variance without noise. The noise variance σ_n^2 is estimated from the sub band HH by the median estimator given as follows:

$$\sigma^2{}_n = \frac{median\ (|E_{HH}(r,c)\ |)}{0.6745}$$, where the pixels $E_{HH}(r,c) \in$ sub band HH.....(6)

From the definition of image corrupted with noise:

$$e(r,c) = g(r,c) + h(r,c) \quad .....(7)$$

While the image and noise are independent of each other, it could be write this:

$$\sigma_e^2 = \sigma_g^2 + \sigma_h^2 \quad .....(8)$$

where σ_d^2 can be computed as shown below:

$$\sigma_d^2 = \frac{1}{R \times C} \sum_{r=1}^{R} \sum_{c=1}^{C} d^2(r,c) \quad \text{.....(9)}$$

The variance of the image, σ_f^2 computed as:

$$\sigma_f = \sqrt{max\ (\sigma_d^2 - \sigma_n^2, 0)} \quad \text{.....(10)}$$

Knowing that ; σ_n^2 and σ_f^2 , the Bayesian threshold can be computed from Equation. (5) and this threshold, could be use the wavelet coefficients threshold at each band.

3. LabVIEW APPLICATION'S DESIGN

The programming process of the proposed application is designed in LabVIEW , the block diagram is shown in figure (3).The proposed application is initialized when the image is stored as png (24 bits) colored image, then converted into (8 bits) gray. Also, it is followed by sets of configurations to resize the inputs and finally initiate processed image . LabVIEW is programmed the design platform for the application that is illustrated in figure(4) as shown the proposed application's front panel.

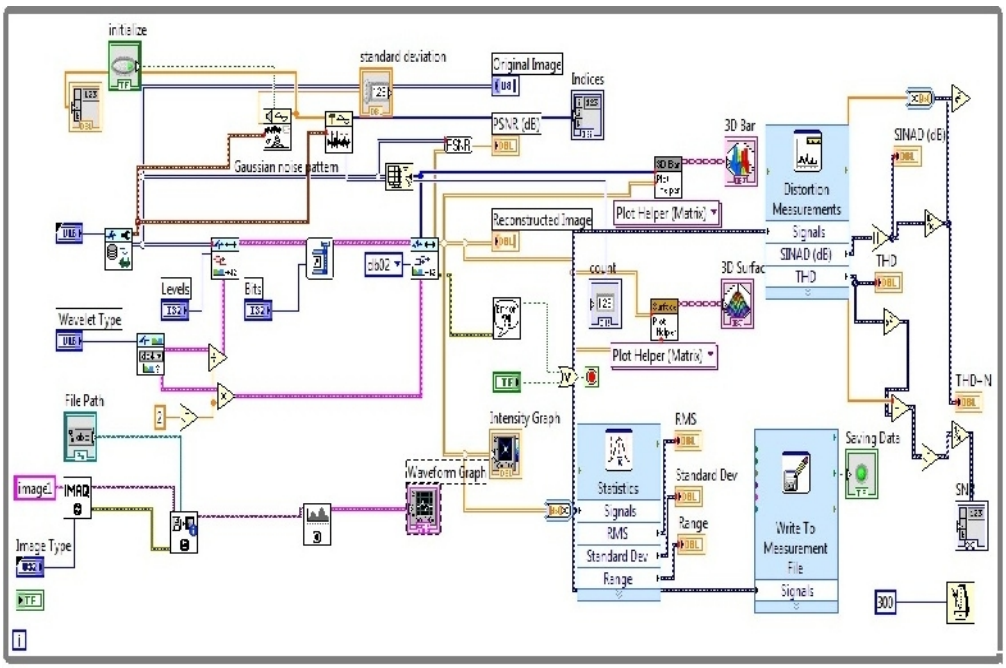

Figure 3. Biometric -Image LabVIEW Application's block diagram

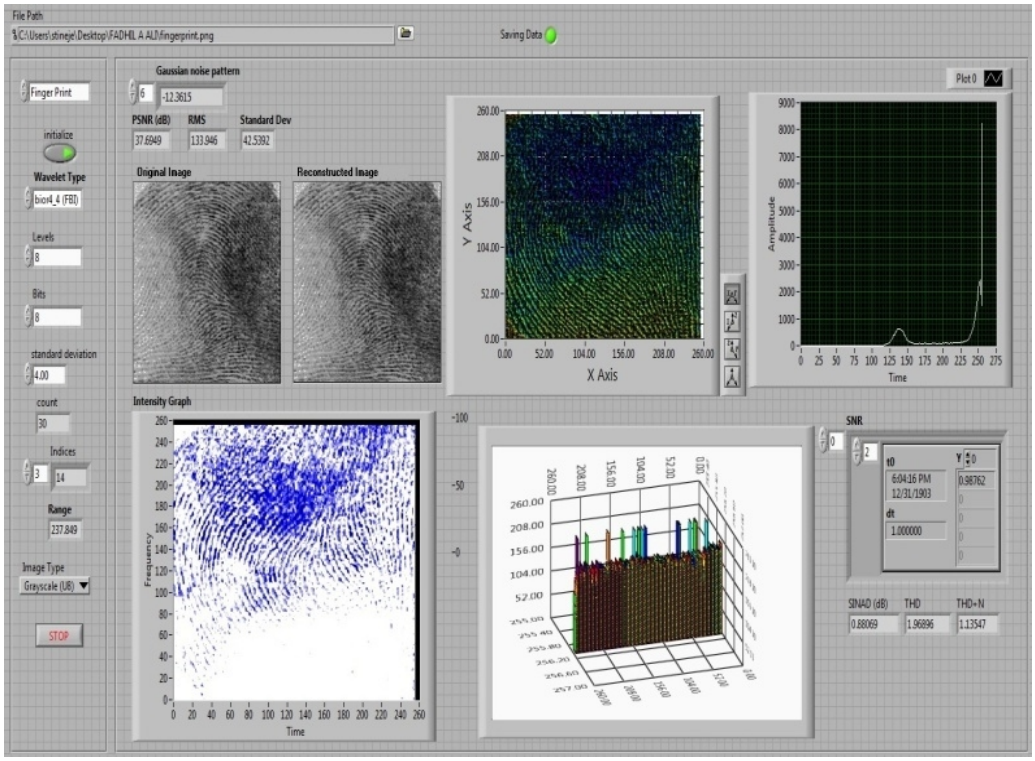

Figure 4. Biometric -Image LabVIEW Application's front panel

4. PROPOSED ALGORITHM

In recent years the biometric systems are became the most imperative field researches. Any biometric systems having two important utilities [9,10, and 11]:

A. Authentication or verification of people's identity.
B. Person's identity is verified by biometric signature.

Many biometric systems are included signs fingerprint, facial fingerprint , iris, hands, and Pam. Signs fingerprint is one of the oldest sign used in the identification systems. In signs fingerprint recognition process the de-noising of the (fingerprint, feature extraction and matching) image are the important features for identification steps. The denoising influences the performance of subsequent feature extraction and matching image.

The proposed algorithm has introduced to be able to reconstruct noisy blurred images. It can be manipulate blurring only without noise, because the noise lies at high frequencies. Wavelet transformation is used to distinguish between low frequency and high frequency components , thus it assumed that is no effect of noise at low frequencies. It is based on the wavelet transform that have using wavelet transform images, which are decomposed into approximation and detail coefficients, where as the detail coefficient is further decomposed into(Horizontal ,Vertical, Diagonal) coefficients, where:

- Approximation coefficients (A_c) represent the Low-Low sub-band.
- Horizontal detail coefficients (H_c) represent the Low-High sub-band.

- Vertical detail coefficients (V_c) represent the High –Low sub-band.
- Diagonal detail coefficients (D_c) represent the High-High sub-band.

This algorithm is represented by the following steps , when decomposes the noisy blurred image into sub-bands [A_c, H_c, V_c , D_c] that using the 2-D Discrete Wavelet Transform (DWT) , where; A_c is the Approximation coefficients(LL), H_c is the Horizontal detail coefficients(LH), V_c is the Vertical detail coefficients(HL) and D_c is the Diagonal detail coefficients(HH).

$$d(r,c) = f(r,c) * h(r,c) + n(r,c) \quad .....(11)$$

The horizontal, vertical, and diagonal coefficients are all called detail coefficients. For the sub-band of approximation coefficients, Equation(11) can be reduced to:

$$d_a(r,c)= a(r,c)*h(r,c) \quad .....(12)$$

where ; $d_a(r,c)$ is the 2-D approximation coefficients of the degraded image , a(r,c) is the 2-D approximation coefficients of the original image and h(r,c) is the 2-D point spread function (PSF). In Equation(11), it is assumed that there is no noise effect in this sub-band, n(r,c)=0. Thus the following steps have the following:

A. In the first iteration , after assuming n(r,c)=0, set $a_0 (r,c) = d_a(r,c)$.

B. Suppose that p is the time of the iteration, for the sake of treatment $a_p(r,c)$ should be converted into a 1-D form $a_p(m)$.Where; $0 \le m \le M^2$, with M=R=C by using the vector transform. Following the next steps as:

First step: convert $a_p(m)$ to its frequency domain representation (the magnitude and phase by using FFT). The length of FFT and FFT^{-1} must be bigger than $2M^2$ to ensure that the recovery is done perfectly. Then;

$$a_p (k) =FFT (a_p(m)) \quad .....(13)$$

$$d_a(k) = FFT (d_a(m)) \text{ where } 0 \le k \le 2M^2 \quad .....(14)$$

Consequently, $a_p (k) = | a_p (k) | \exp[j \theta_{ap}(k)]$ .....(15)

and $d_a(k) = | d_a(k) | \exp[j \theta_{da}(k)]$ .....(16)

Second step: The phase replacing process should take place here ;

$$\longrightarrow \qquad \theta_{da}(k) \qquad \theta_{ap}(k) \quad .....(17)$$

Then the new sequence $a_{p+1} (k)$ is obtained as:

$$a_{p+1} (k) = | a_p (k) | \exp[j \theta_{da}(k)] \quad .....(18)$$

Third step: Now applying FFT^{-1} for both $a_{p+1}(k)$ and $a_{p+1} (m)$, since $a_{p+1} (m)$ is a $2M^2$ –(i.e. point length should be truncated into an M^2-point length), therefore, the time truncation process has taken place as in Equation(19).

$$\hat{a}_{p+1}(m) = \begin{cases} a_{p+1}(m) & 0 \le m \le 2M^2-1 \\ 0 & M^2 \le m \le 2M^2-1 \end{cases} \quad \text{.....(19)}$$

Fourth step: Using inverse vector transform, the sequence $\hat{a}_{p+1}(m)$ is transformed into

$$\hat{a}_{p+1}(r,c)$$

Fifth step: Edge detection operator is used to derive the sequence in the fourth step.

Sixth step: The reconstructed image at iteration p+1 is obtained by

$$a_{p+1}(r,c) = \hat{a}_{p+1}(r,c) + \hat{a}_{p+1}(r,c) \quad \text{.....(20)}$$

Seventh step: For the detail coefficients (H_c, V_c, D_c) are used as following;

- The thresholding values should be found to reduce or remove the effect of noise by using Bayesian-Shrink method.
- The operation in detail coefficients must be delayed until the complete iterations for finding the new approximation coefficients are accomplished.

Eighth step: Reconstruct the recovered image by applying the 2-D Inverse Discrete Wavelet Transform (IDWT)

.

The **Root Mean Square Error** (RMS) and the **Signal to Noise Ratio** (SNR) are used in the proposed application to measure the errors in the reconstructed image. Hence **RMS** and the **SNR** can be calculated as the following equations [12,13 and 14]:

$$RMS = \sqrt{\frac{1}{R \times C} \sum_{r=0}^{R-1} \sum_{c=0}^{C-1} [f(r,c) - \hat{f}(r,c)]^2} \quad \text{.....(21)}$$

$$SNR = 10\log_{10} \frac{\sum_{r=0}^{R-1} \sum_{c=0}^{C-1} [f(r,c) - d(r,c)]^2}{\sum_{r=0}^{R-1} \sum_{c=0}^{C-1} [f(r,c) - \hat{f}(r,c)]^2} \quad \text{....(22)}$$

where; $f(r,c)$: is the original image, and $\hat{f}(r,c)$: is the reconstructed image. Another related image quality measure is the **Peak Signal to Noise Ratio** PSNR), which is inversely proportional to the RMS, its units are in decibels (dB) and is formally defined by[15]:

$$PSNR = 20 \log_{10} \left[\frac{255}{RMS}\right] \quad \text{.....(23)}$$

where; 255 is the maximum pixel value for an 8 bits / pixel gray-scale image. In that case, the assessment of the de-blurred and denoised image is done subjectively.

4. RESULTS & DISCUSION

The proposed algorithm is tested for the blurred fingerprint images under Gaussian noise. Specific image is selected with (512 × 512) pixels spatial resolution and used as the gray-scale type. In proposed algorithm there are different 2-levels Discrete Wavelet Transform (DWT) filtering method is used to decompose the images using many types as following:

- Harr filter
- Daubechies filters of order(1) denoted as "db2" through order(8) as "db8"
- Symlet filters (2 through 8)
- Coiflet filters (1 through 5)
- Biorthogonal filters (bior1_3,boir2_2,boir3_3,boir4_4 and bior5_5)

Table (1) is shown the fingerprint reconstructed images, and summarizes the practical results of the proposed algorithm prototype system. Also, to show the histogram of the reconstructed image; which is a graphical distribution of pixel values through entire image. For building up the presented images, it has to take each possible value a pixel is assigned a point on the X axis of a bi-dimensional plane, and the number of pixels having this value will be its corresponding point on the Y axis[16].

The proposed application is taken a grayscale image - 256 levels of gray represented by a bar chart. This chart is taken 256 points on the X axis ranged from 0 to 255, adding that pixels having each value as its corresponding point to Y axis as well. In figures (5,6,7,8 and 9) the histograms for the fit reconstructed image under the used wavelet types are shown respectively.

Table 1. The Objective Results Of The Fingerprint Reconstructed Images Using The Proposed Algorithm Used Diffirent Filters

Wavelet type	PSNR(db)	Standard Deviation	Correlation factor of reconstructed image	RMS
Haar	42.890	42.773	0.969	13.443
db2	40.832	42.527	0.945	13.440
db3	38.690	41.931	0.991	13.467
db4	37.716	42.513	0.197	13.446
db5	38.479	42.280	0.998	13.397
db6	39.008	42.080	1.003	13.484
db7	38.084	42.954	0.959	13.450
db8	37.850	41.958	0.994	13.496
sym2	40.832	42.527	0.946	13.440
sym3	38.690	41.931	0.991	13.467
sym4	38.386	42.127	0.944	13.440
sym5	37.668	42.317	0.955	13.445
sym6	38.241	43.083	0.930	13.420
sym7	38.631	43.129	0.164	13.462
sym8	38.736	41.984	0.998	13.373

coif1	39.121	42.944	0.982	13.494
coif2	38.001	42.568	0.968	13.482
coif3	38.650	42.861	1.005	13.410
coif4	37.881	43.180	0.973	13.380
coif5	38.435	42.326	0.988	13.561
bior1_3	39.420	42.207	0.957	13.479
bior2_2	32.769	44.419	0.972	13.571
bior3_3	24.174	40.448	0.330	12.978
bior4_4	37.695	42.539	0.988	13.395
bior5_5	38.759	42.495	0.998	13.423

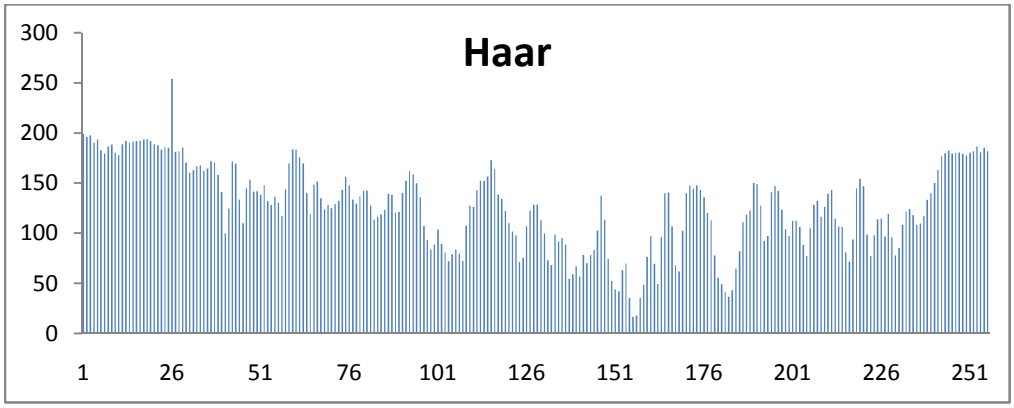

Figure 5. Reconstructed fingerprint Image Histogram of wavelet type Haar

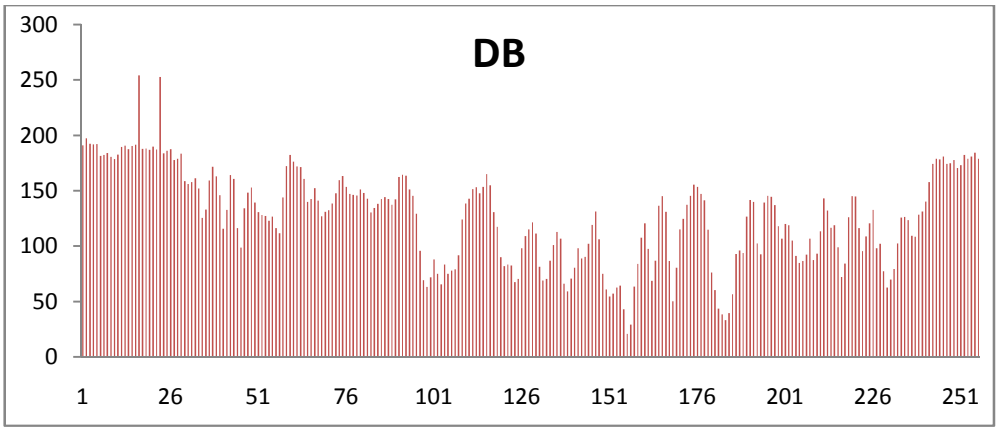

Figure 6. Reconstructed fingerprint Image Histogram of wavelet type DB

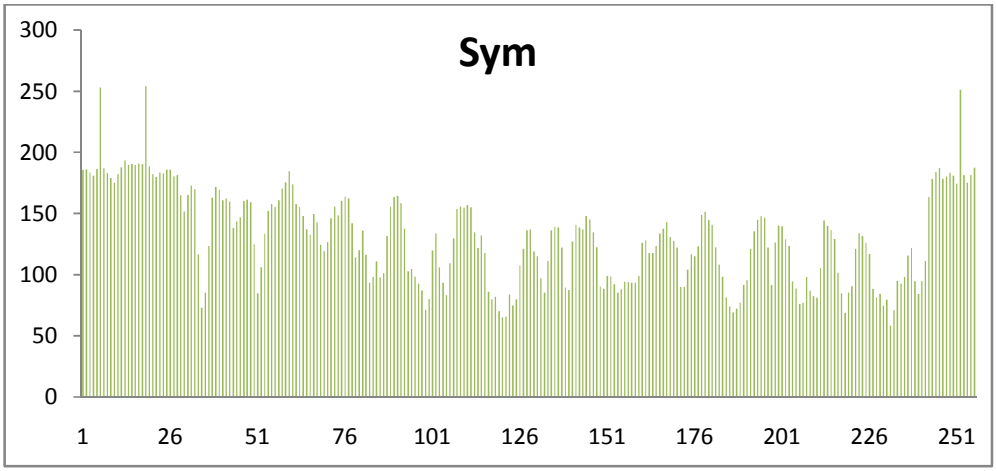

Figure 7. Reconstructed fingerprint Image Histogram of wavelet type Sym

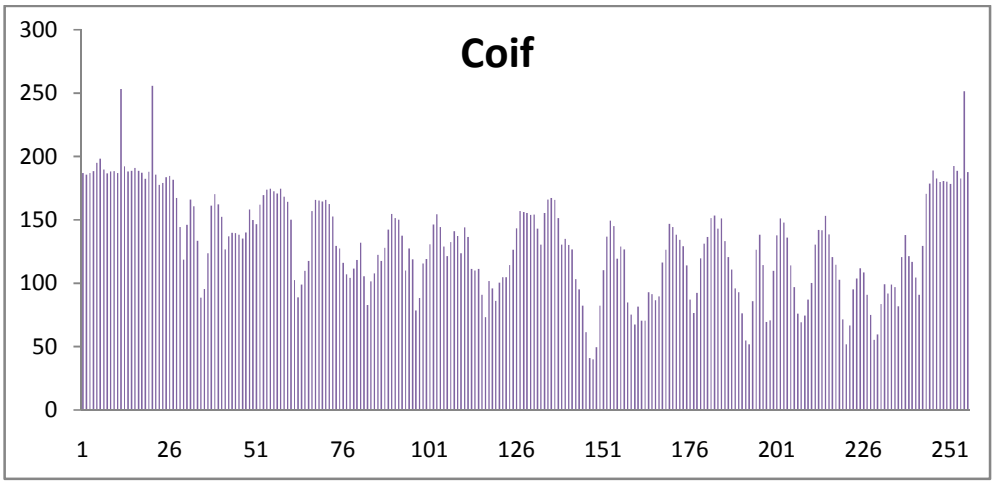

Figure 8. Reconstructed fingerprint Image Histogram of wavelet types Coif

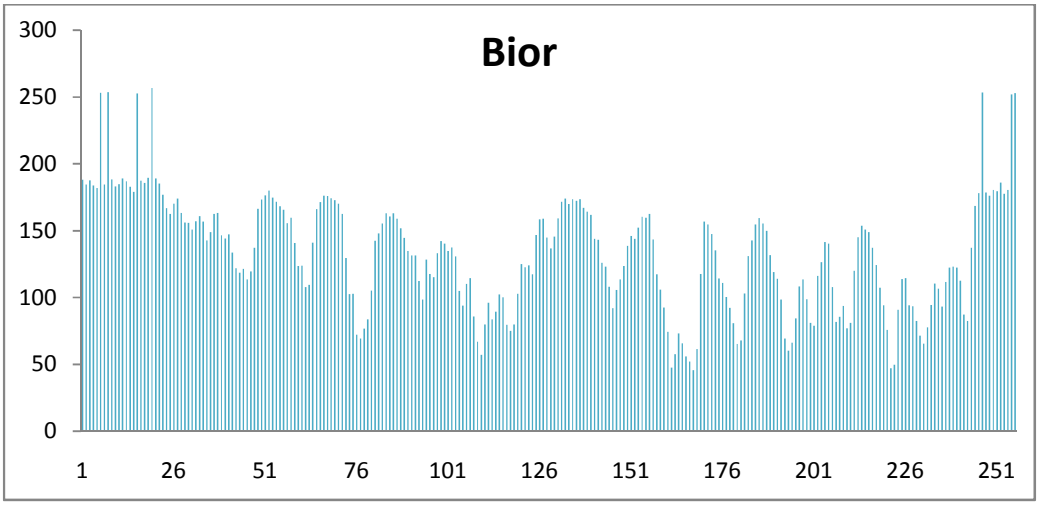

Figure 9. Reconstructed fingerprint Image Histogram of wavelet types Bior

6. CONCLUSION

In this work , a proposed algorithm is used LabVIEW applications to find out de-niosing and de-blurring system, and may get to reduced both noise and blurring out of fingerprint images corrupted with high Gaussian noise. While all standard methods cannot reduce both noise and blur from biometric images only if the amount of noise is very small. Many of astronomical images and Medical images have the quality criteria depends on different features, compared to the fingerprint images are getting more strong quality criteria to perform different kind of algorithms. Also, this paper tests many wavelet types for the biometric image to give more exact and wide range of use in the future , the proposed system is shown the histogram per each filter and the best selection criteria used.

The future work of this invistigation may be forwaded to use the wavelet package instead of DWT,and reduce the effect of blurring by using the MFPIA first and then the Discrete Wavelet Transform to reduce the effect of noise.

ACKNOWLEDGEMENT

Many thanks to Oklahoma State University and Electrical and Computer Engineering Department for hosting me. My deep appreciation to **Dr. James E. Stine** for his collaboration. Also, many and special thanks to SRF/IIE for giving me all possible supports.

REFERENCES

[1] Umbaugh S. E. , (1998) Computer Vision and Image Processing , Prentice-Hall Inc., USA
[2] Vannimenus C. H., (2003) Denoising Images with Wavelets, French
[3] Alka Vishwa , Shilpa Sharma, (2012) "Speckle Noise Reduction in Ultrasound Images by Wavelet Thresholding" , International Journal of Advanced Research in Computer Science and Software Engineering, Volume 2, Issue 2
[4] Ghazel M., (2004) Adaptive Fractal and Wavelet Image Denoising, Ph. D. Thesis Submitted to The Electrical and Computer Engineering, University of Waterloo, Ontario, Canada
[5] Kumari S. and Vijay R., (2012) "Effect of Symlet Filter Order on Denoising of Still Images", Advanced Computing: An International Journal (ACIJ), Vol.3, No.1
[6] Dai Fei Guo ,Wei hong Zhu , Zhenming Gao, Jian Qiang Zhang, (2000) "A study of wavelet thresholding denoising" , 5th International Conference on Signal Processing Proceedings, WCCC-ICSP,pp.329-332
[7] Chang S. G., Yu B. and Vetterli M., (2000) "Adaptive Wavelet Thresholding for Image Denoising and Compression" , IEEE Trans. Image Processing, Vol. 9, No. 9, pp. 1532-1546
[8] Donoho D. L. and Johnstone I. M. , (1995) "Adapting to Unknown Smoothness via Wavelet Shrinkage", Journal of American Statistical Association, 90(432) , pp.1200 -1224
[9] Davide Maltoni, Dario Maio, Anil K. Jain and Salil Prabhakar, (2003) Handbook of fingerprint recognition, Springer-Verlag
[10] Jain L.C., Halici, I.Hayashi U.,. Lee S.B and Tsutsui S., (1999) Intelligent Biometric Techniques in Fingerprint and Face Recognition, CRC Press LLC
[11] Gornale S.S., Humbe V., Manza R. and Kale K.V., (2010) "Fingerprint image de-noising using multi-resolution analysis (MRA) through stationary wavelet transform (SWT) method" , International Journal of Knowledge Engineering, Vol. 1, Issue 1 , pp-05-14
[12] Mun Gi Choia, Nikolas P. Galatsanosa and Aggelos K. Katsaggelosb , (1996) " Multichannel Regularized Iterative Restoration of Motion Compensated Image Sequences", Journal of Visual Communication and Image Representation, vol.7, issue 3, pp.244-258
[13] Miao X., (2000) Image Restoration: Removal of Blur Caused by Uniform Linear Motion, University of California at Berkeley

[14] Aggelos K. K. , (1989) "Iterative Image Restoration Algorithm", Optical Engineering, Vol. 28, No. 7, pp. 735-748

[15] Antoniadis A. and Bigot J., (2001) "Wavelet Estimators in Nonparametric Regression: A Comparative Simulation Study" , Journal of Statistical Software, Vol. 6

[16] Gonzalez R. C. and Woods R. E., (2002) Digital Image Processing, Ed. Prentice Hall. New Jersey, USA

Author

PostDoc Researcher at Oklahoma State University. Currently, the main activities are focusing on remote control researches by LabVIEW and an engineering academic strategy. Other researches were done in different areas in computer engineering fields, some projects and proposals have been written and discussed.

- Neural Networks and Image processing units
- pattern recognition design / data mining
- FPGA (Field Programmable Gate Array).
- LabVIEW presentations edited for undergrad and post grad students.
- Edited new Text book.